Supplemental Restraint System -

Torque Specifications

Description	Nm	lb-ft
Passenger air bag module bracket nuts	10	7
Passenger air bag module nuts	10	7
Rear side air curtain module Torx screws	10	7
C-pillar side impact sensor Torx bolts	8	6
Side air curtain module Torx screws	10	7
B-pillar side impact sensor Torx screws	8	6
Restraints control module (RCM) Torx screws	10	7
Front door side impact sensor Torx bolts	8	6
Side air bag module nuts	10	7
Front impact sensor Torx bolts	8	6

mcx30.cc

Published: 18-May-2011

Supplemental Restraint System - Air Bag and Safety Belt Pretensioner
Supplemental Restraint System (SRS)

Description and Operation

COMPONENT LOCATION - SHEET 1 OF 2

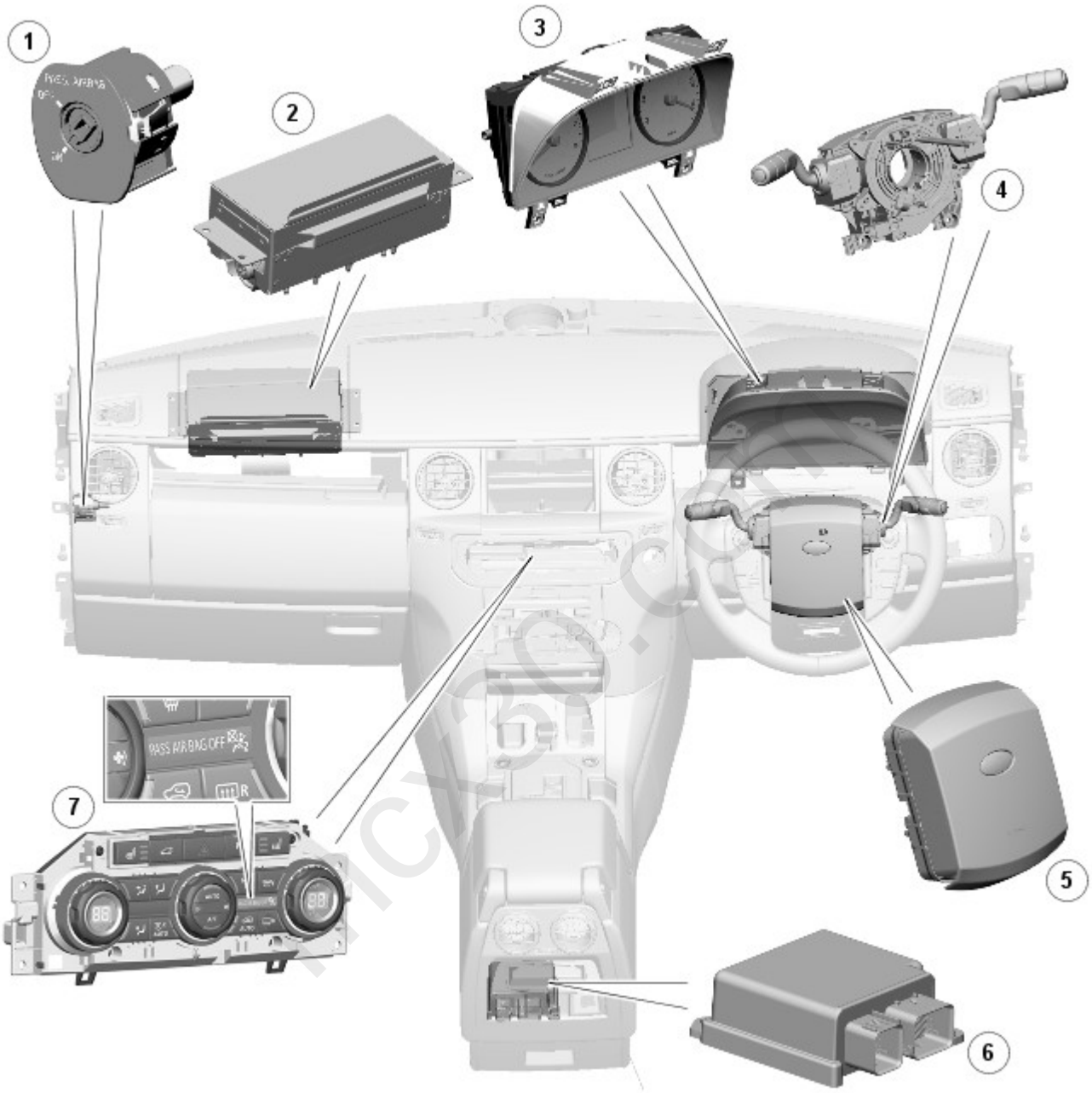

Item	Part Number	Description
1	-	supplemental restraint system (SRS) warning indicator
2	-	Driver air bag
3	-	Clockspring
4	-	Passenger air bag deactivation indicator
5	-	Passenger air bag
6	-	Passenger air bag deactivation switch (all except NAS (North American specification) and Australia)
7	-	restraints control module (RCM)

COMPONENT LOCATION - SHEET 2 OF 2 (ALL EXCEPT NAS)

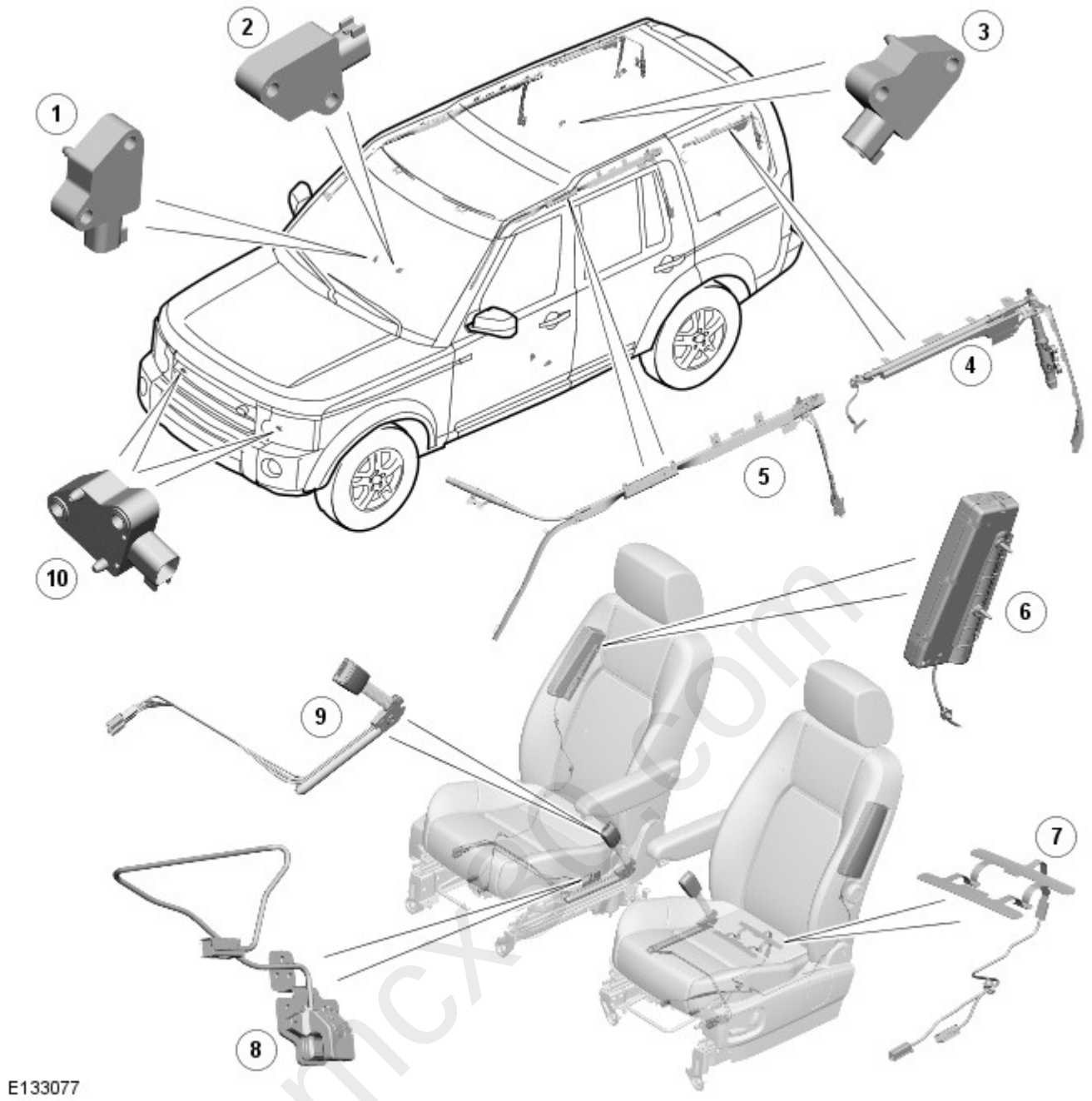

Item	Part Number	Description
1	-	Door side impact sensor
2	-	B pillar side impact sensor
3	-	Rear quarter side impact sensor
4	-	Third row side air curtain
5	-	First and second row side air curtain
6	-	Safety belt pretensioner and buckle switch
7	-	Seat position sensor
8	-	Occupant classification module (NAS only)
9	-	Seat cushion pressure sensor (NAS only)
10	-	Seat cushion pressure pad (NAS only)
11	-	Safety belt tension sensor (NAS only)
12	-	Side air bag
13	-	Front impact sensors

COMPONENT LOCATION - SHEET 2 OF 2 (NAS)

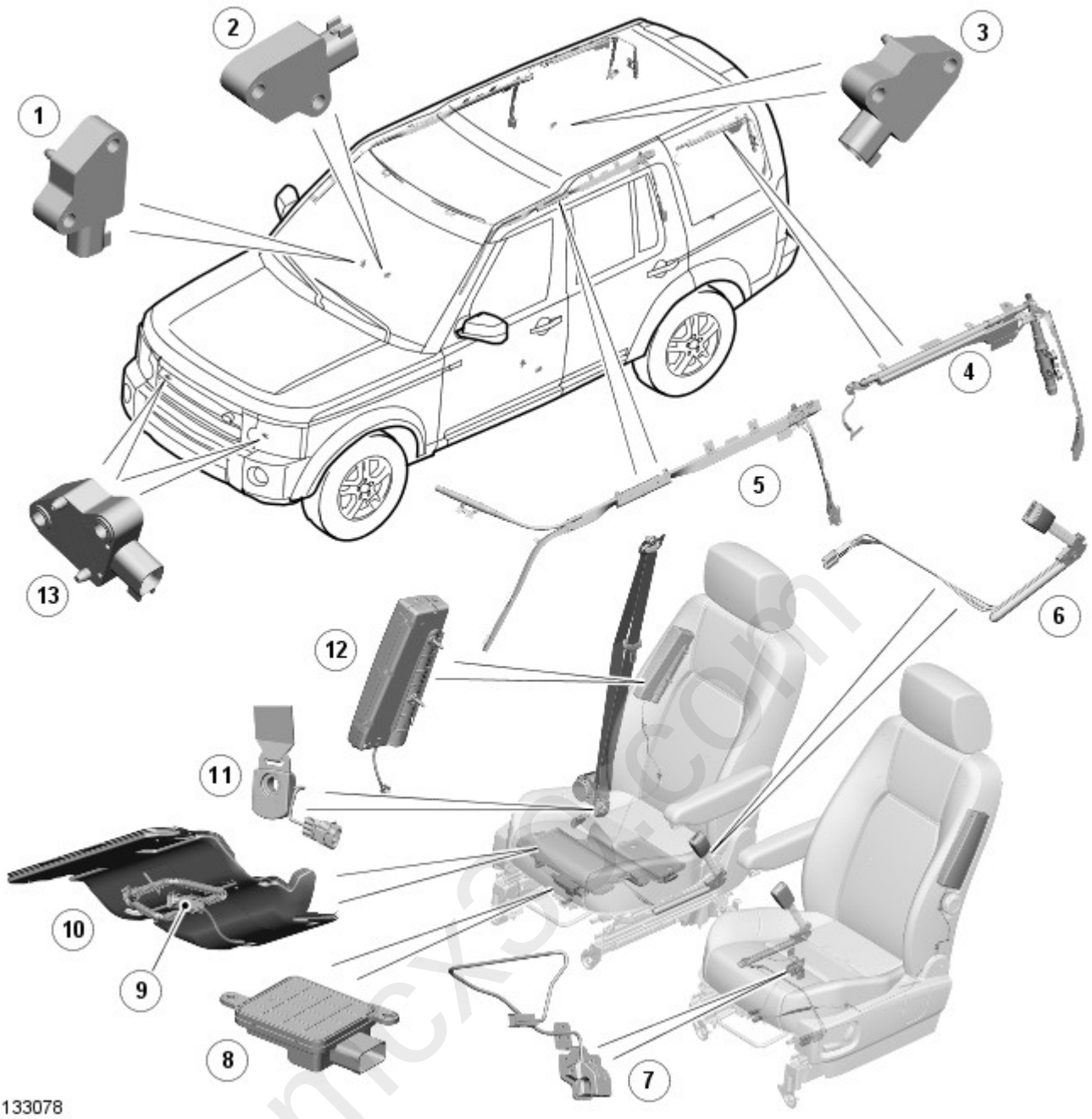

Item	Part Number	Description
1	-	Door side impact sensor
2	-	B pillar side impact sensor
3	-	Rear quarter side impact sensor
4	-	Third row side air curtain
5	-	First and second row side air curtain
6	-	Safety belt pretensioner and buckle switch
7	-	Seat position sensor
8	-	Occupant classification module (NAS only)
9	-	Seat cushion pressure sensor (NAS only)
10	-	Seat cushion pressure pad (NAS only)
11	-	Safety belt tension sensor (NAS only)
12	-	Side air bag
13	-	Front impact sensors

GENERAL

The SRS provides additional protection for occupants in certain vehicle accident conditions. The SRS consists of:

- A driver air bag
- A passenger air bag
- A side air bag on each front seat
- Side air curtains for first and second row seats
- Side air curtains for third row seats (where fitted)
- A pretensioner for each front safety belt
- A buckle sensor for each front safety belt

- Front and side impact sensors
- A passenger air bag deactivation indicator
- A passenger air bag deactivation switch (all except NAS and Australia)
- An occupant monitoring system for the front passenger seat
- A position sensor for the driver seat
- A SRS warning indicator
- A clockspring
- A RCM.

WARNING: All pyrotechnic devices are dangerous. Before performing any procedures on any pyrotechnic device, read all information contained within the Standard Workshop Practices section of this manual.
For additional information, refer to: Standard Workshop Practices (100-00 General Information, Description and Operation).

The SRS features selective activation of the air bags and pretensioners, and two stage driver and passenger air bags. The RCM monitors internal and external sensors and activates the required safety belt pretensioners and air bags if the sensors detect an impact or roll-over above preset limits.

DRIVER AIR BAG

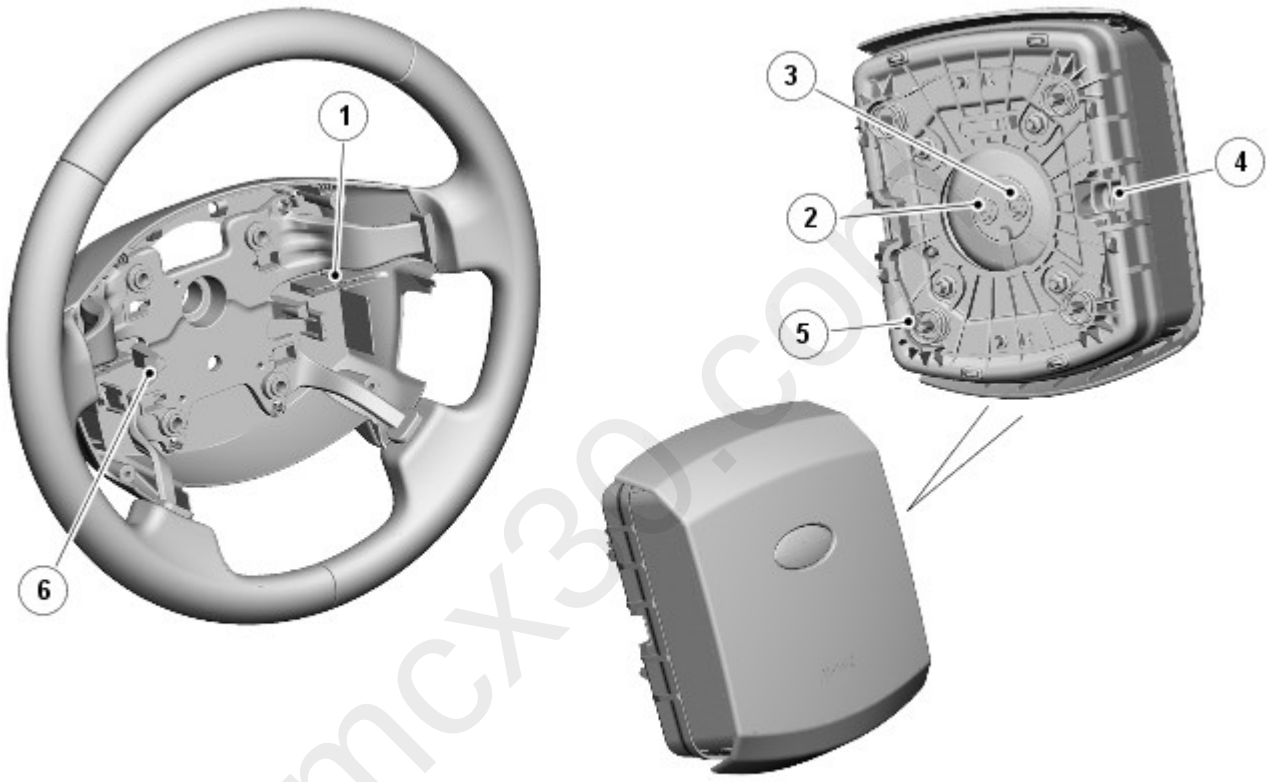

E133079

-

Item	Part Number	Description
1	-	Release tool slot and guide channel
2	-	Inflator stage 1 connector
3	-	Inflator stage 2 connector
4	-	Latch spring
5	-	Locating pin and spring
6	-	Latch hook

The driver air bag forms the center pad of the steering wheel. Four pins and two latches locate and secure the driver air bag to the steering wheel. The latches consist of wire springs on each side of the driver air bag which engage with hooks in the steering wheel. The driver air bag is released from the steering wheel by pulling on the wire springs with a special tool inserted through a slot on each side of the steering wheel hub. Springs on the locating pins then push the driver air bag away from the steering wheel.

A Lucar connector attaches a ground to the driver air bag.

The driver air bag has a two stage inflator, with separate electrical connectors for each stage. The inflator contains a non-azide propellant as the gas generator.

Lines moulded into the inner surface of the driver air bag cover provide weak points that split open in a controlled manner when the driver air bag deploys. The inflated volume of the air bag is 57 liters (2.01 ft^3).

PASSENGER AIR BAG

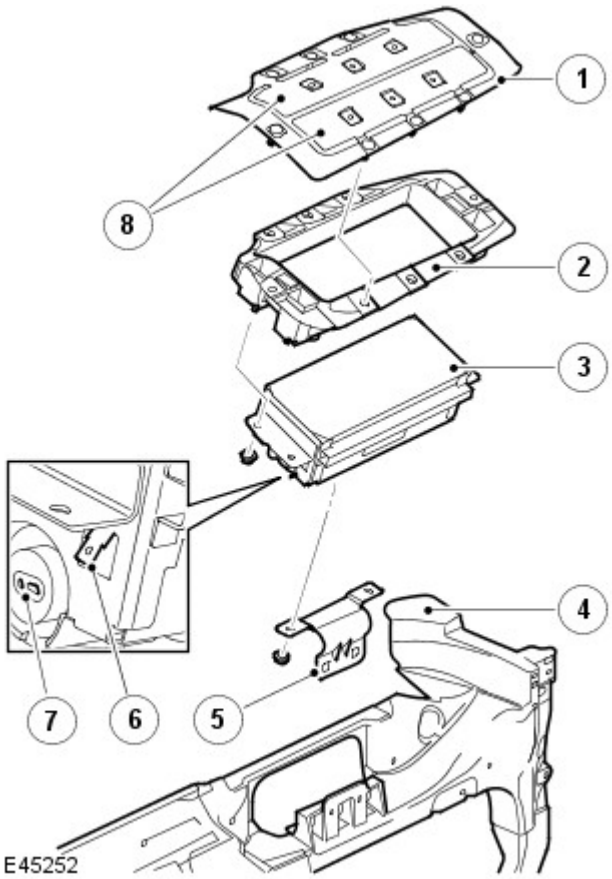

Item	Part Number	Description
1	-	Reinforcement lid
2	-	Chute
3	-	Passenger air bag
4	-	In-vehicle crossbeam
5	-	Mounting bracket
6	-	Lucar connector
7	-	Inflator connector
8	-	Deployment doors

The passenger air bag is located in the instrument panel, behind the upper glove compartment. The bottom of the passenger air bag is attached to a mounting bracket on the in-vehicle crossbeam. The top of the passenger air bag is attached to a chute, which, in turn, is attached to a reinforcement lid in the top of the instrument panel. When the air bag deploys, the chute guides the air bag to the underside of the reinforcement lid. The reinforcement lid incorporates two deployment doors that are forced open, splitting the instrument panel covering, when the air bag deploys.

A Lucar connector attaches a ground to the passenger air bag.

The passenger air bag has a two stage inflator, with separate electrical connectors for each stage. The inflator contains a non-azide propellant as the gas generator. The inflator uses a high pressure mix of air and hydrogen gas as the inflation medium. The inflated volume of the air bag is 130 liters (4.59 ft^3).

SIDE AIR BAGS

• NOTE: Left side air bag shown, right side air bag is mirror image

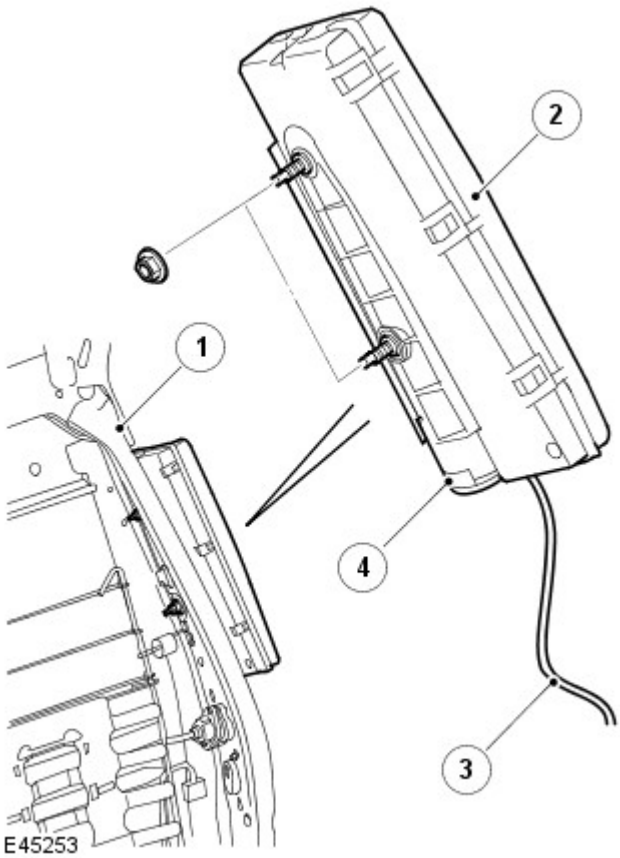

Item	Part Number	Description
1	-	Seat backrest frame
2	-	Side air bag
3	-	Cable
4	-	Inflator

A side air bag is attached to the outside of each front seat backrest frame, under the backrest cover.

The side air bags are handed, and each consist of a moulded plastic case which contains the folded air bag and the inflator. A cable connects the igniter of the inflator to a connector in the main seat harness connector block located under the front edge of the seat cushion.

When the air bag deploys it forces the front edge of the moulded plastic case apart and splits open the backrest cover.

The side air bags use compressed argon as the inflation medium. The inflated volume of each side air bag is 12 liters (0.42 ft^3).

SIDE AIR CURTAINS

The side air curtains are designed to protect the head and upper body in side impact and roll-over situations. The first and second row side air curtains are a standard fit on all vehicles. The third row side air curtains are fitted on seven seat vehicles only. The side air curtains use compressed argon as the inflation medium.

First and Second Row Side Air Curtain

• NOTE: Right side air curtain shown, left side air curtain is mirror image.

mcx30.com

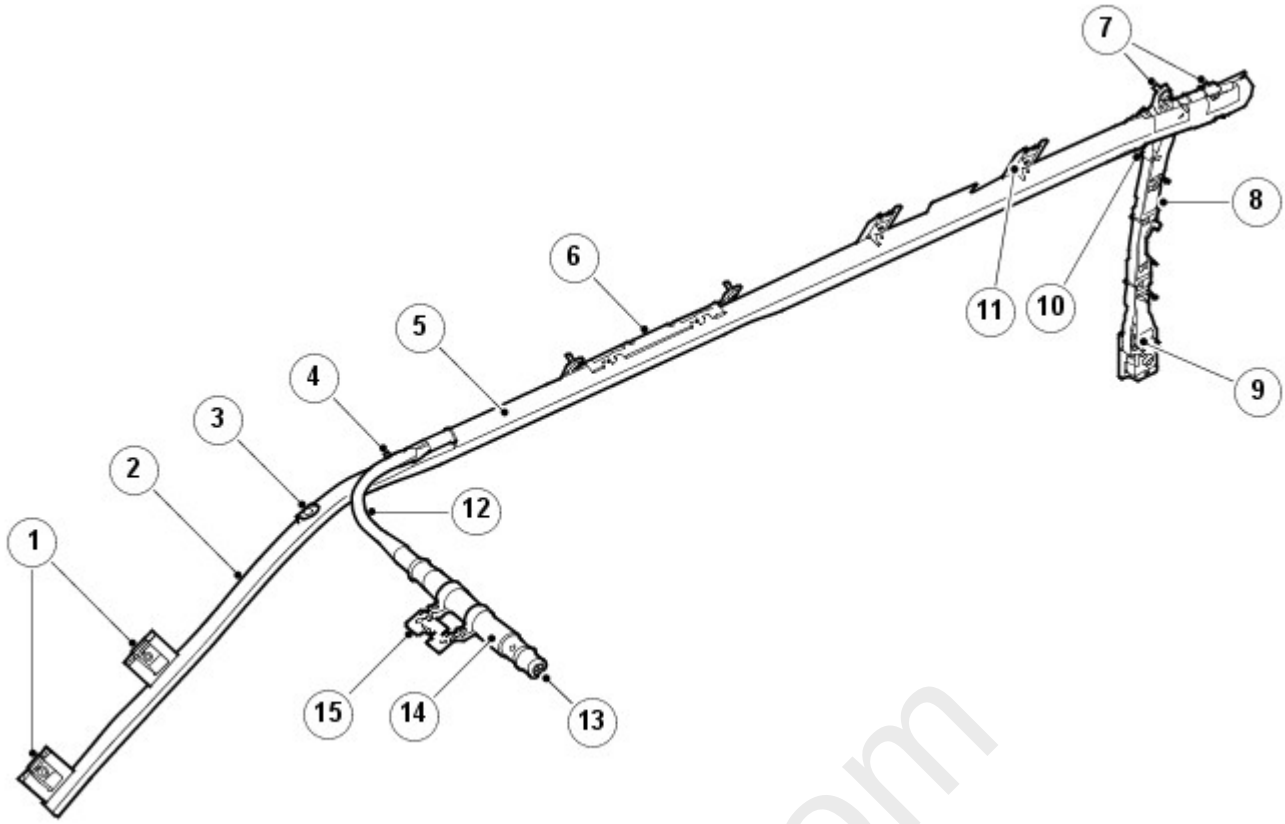

E45254

Item	Part Number	Description
1	-	Air curtain anchorage points
2	-	Non inflatable section of air curtain
3	-	Air curtain clip (manufacturing aid)
4	-	Front gas guide attachment
5	-	Inflatable section of air curtain
6	-	B pillar ramp
7	-	Securing screws
8	-	Active tether device
9	-	Rear tether anchor
10	-	Rear tether
11	-	Cant rail clip
12	-	Gas guide pipe
13	-	Inflator electrical connector
14	-	Inflator
15	-	Inflator mounting bracket

The first and second row side air curtains are installed on the cant rails above the front and rear doors, behind the headliner.

Each side air curtain has an inflator, which is attached to the header rail by a mounting bracket and two screws. The inflator is connected to the air curtain by a gas guide pipe.

The gas guide pipe and air curtain are secured along the cant rail by a fixing at the front of the gas guide pipe, two fixings at the B pillar ramp, two clips and two screws, and two fixings at the end of the gas guide pipe and C pillar ramp.

At the rear of the air curtain, an active tether device is clipped in two positions down the C pillar. At the bottom of the active tether device is a fixing anchorage.

The front of the air curtain is secured to the A pillar by two fixings.

When the side air curtain deploys, it breaks out of the B pillar ramp and the clips on the cant rail and extends downwards from behind the headliner. The deploying air curtain is tensioned between the anchorage points on the A pillar and the active tether device on the C pillar. This retains the air curtain in position against the upper part of the doors and the B pillar.

Third Row Side Air Curtain

- NOTE: Right side air curtain shown, left side air curtain is mirror image.

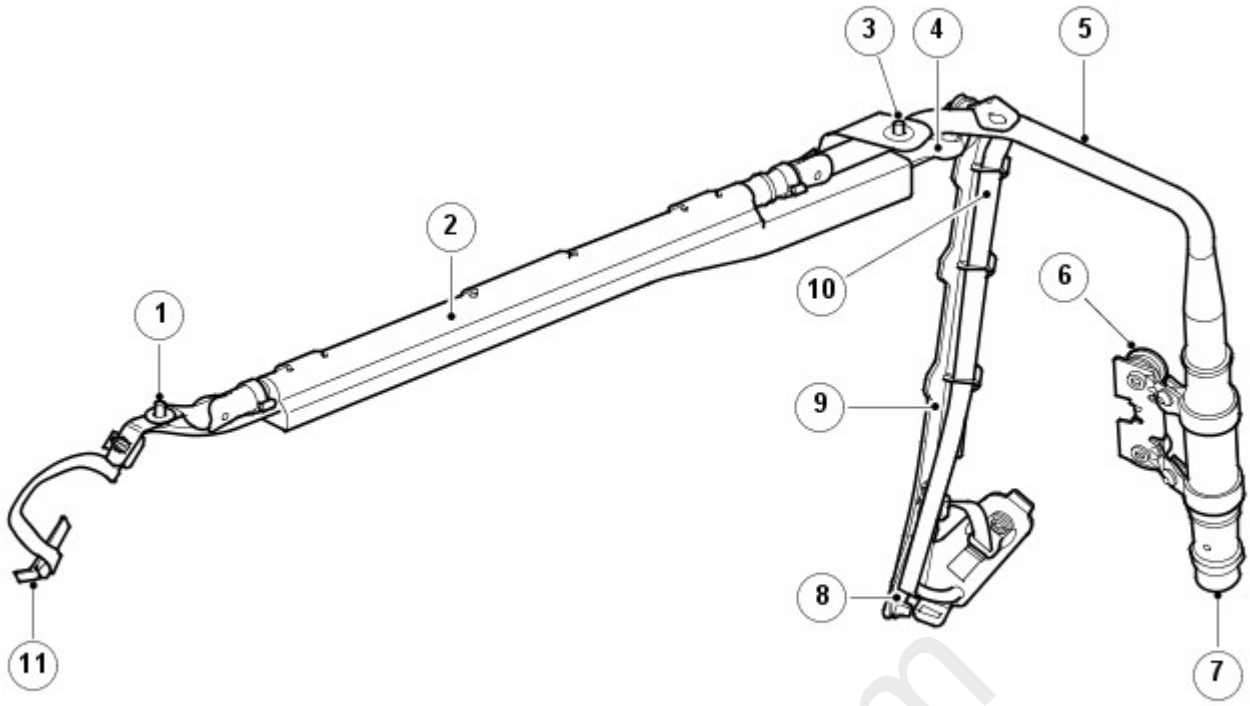

E45255

Item	Part Number	Description
1	-	Securing screw
2	-	Air curtain
3	-	Securing screw
4	-	Rear tether
5	-	Gas guide pipe
6	-	Inflator mounting bracket
7	-	Inflator
8	-	Rear tether anchor
9	-	Tether housing
10	-	Rear tether
11	-	Front tether anchor

The third row side air curtains are installed on the cant rails above the rear quarter windows, behind the headliner.

Each side air curtain has an inflator, which is attached to the D pillar by a mounting bracket and two screws. The inflator is connected to the air curtain by a gas guide pipe. The gas guide pipe and air curtain are secured to the cant rail by two screws. Tethers are attached to the front and rear of the air curtain. The front tether is anchored to the C pillar. The rear tether is anchored to the D pillar and held in position by a tether housing.

When a third row side air curtain deploys, it extends downwards from behind the headliner. The expanding air curtain tightens the tethers, which retain the air curtain in position against the rear quarter window.

PRETENSIONERS

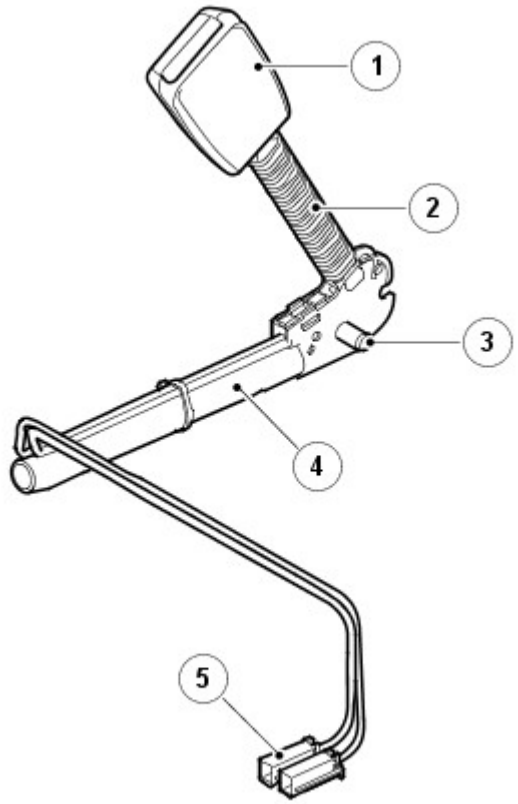

E45256

Item	Part Number	Description
1	-	Safety belt buckle
2	-	Boot
3	-	Anchor bolt
4	-	Piston and tube
5	-	Electrical connectors for inflator and buckle switch

The pretensioners are used to tighten the front safety belts during a collision to ensure the occupants are securely held in their seats. A pretensioner is integrated into each front safety belt buckle.

Each pretensioner has a tube containing an inflator and a piston. The inflator is connected to the RCM. The piston is attached to a steel cable, the opposite end of which is attached to the safety belt buckle.

On receipt of a fire signal from the RCM, the inflator generates nitrogen gas that rapidly expands to drive the piston along the tube, pulling the cable and drawing the safety belt buckle downwards.

SAFETY BELT SENSORS

The buckle of each front safety belt incorporates a Hall effect sensor that provides a safety belt status signal to the RCM. The RCM broadcasts the status of the two front safety belts on the high speed controller area network (CAN) bus for use by the instrument cluster.

IMPACT SENSORS

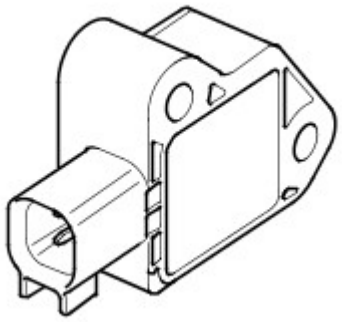

E45257

Impact sensors are installed in the front and both sides of the vehicle. The use of multiple impact sensors provides shorter air bag trigger times, through faster detection of lateral and longitudinal acceleration, and improves detection accuracy.

There are two front impact sensors attached to brackets on the body front support frame, just above each front longitudinal.

There are six side impact sensors located in the passenger compartment, as follows:

- One attached to each front door.
- One attached to the base of each B pillar.
- One installed in each rear quarter, above the rear wheelarch.

Each impact sensor incorporates an accelerometer and a microcontroller powered by a feed from the RCM. The power feed also provides the interface connection through which the impact sensor communicates with the RCM using serial data messages. Acceleration is evaluated by the microcontroller and transmitted to the RCM, which then makes the decision on whether or not to activate the air bags and pretensioners.

When the ignition is switched on the RCM supplies power to the impact sensors, which perform a self test. After satisfactory self tests the impact sensors continually output 'sensor active' messages to the RCM. If a fault is detected the relevant impact sensor sends a fault message, instead of the sensor active message, to the RCM. The RCM then stores a related fault code and illuminates the SRS warning indicator.

PASSENGER AIR BAG DEACTIVATION INDICATOR

E133080

The PAD (passenger air bag deactivation) indicator is installed on the climate control module in the center of the instrument panel. When appropriate, the indicator illuminates to advise front seat occupants that the passenger air bag is disabled. Operation of the indicator is controlled by the RCM based on seat occupancy status derived from the occupant classification system (NAS vehicles) or the passenger air bag deactivation switch (all except NAS and Australian specification vehicles).

The RCM illuminates the indicator:

- When the passenger air bag is deactivated with the PAD switch (where fitted).
- When required by passenger seat occupant monitoring (NAS vehicles only).

PASSENGER AIR BAG DEACTIVATION SWITCH

E45259

The PAD switch provides a method of manually disabling the passenger air bag on all vehicles except Australian specification and those fitted with the occupant classification system. The switch is installed in the front passenger end of the instrument panel and can be operated by the emergency key blade in the smart key.

When the PAD switch is operated, it changes a ground connection between two pins in the connectors of the RCM. When the PAD switch is selected to OFF, the RCM disables the passenger air bag and, if the front passenger seat is occupied, illuminates the PAD indicator.

OCCUPANT SENSING

There are two types of occupant sensing:

- In all markets except North America, vehicles have an occupant detection system to activate the seat belt minder
- On NAS vehicles, an occupant classification system provides signals to the RCM to allow the correct arming of the passenger air bag and corresponding indicator.

Occupant Detection System

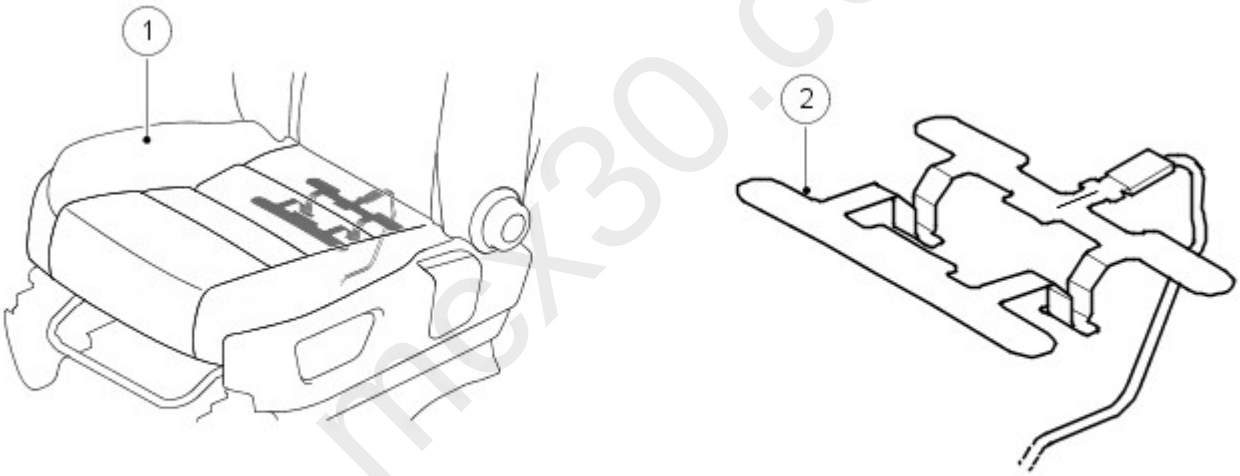

E46657

Item	Part Number	Description
1	-	Seat cushion
2	-	Pressure switch

The occupant detection system can only determine if the front passenger seat is occupied or unoccupied. The occupant detection system consists of a pressure switch installed between the foam padding and the cover of the front passenger seat cushion.

The pressure switch incorporates a number of load cells connected in series and embedded in a plastic film. Weight on the pressure sensor increases the resistance of the circuit.

The instrument cluster supplies a reference voltage to the pressure switch and measures the current draw to determine the occupancy status. From the occupancy status, and the status of the front passenger safety belt (received from the RCM on the high speed CAN bus), the instrument cluster determines the belt minder status.

Occupant Classification System

mex30.com

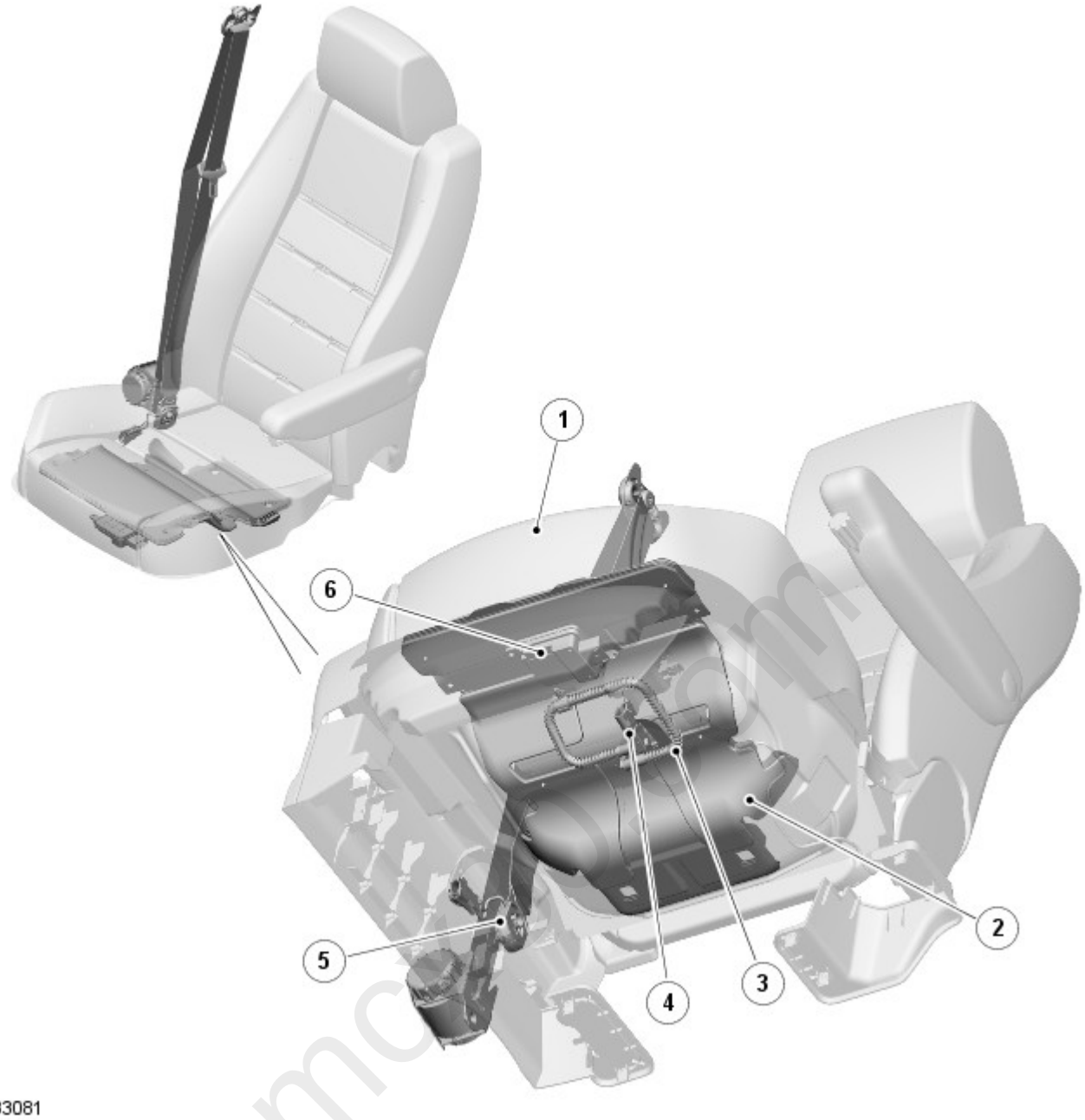

Item	Part Number	Description
1	-	Seat cushion
2	-	Pressure pad
3	-	Pressure tube
4	-	Pressure sensor
5	-	Safety belt tension sensor
6	-	Occupant classification module

The occupant classification system comprises an occupant classification module attached to the underside of the seat, a silicon filled bladder and pressure sensor fitted between the cushion foam and the seat pan and a seat belt tension sensor. When an occupant sits on the seat a pressure is created in the bladder and the occupant weight is determined from the pressure generated. The weight is compared against four classification thresholds. These are:

- Empty
- Occupied inhibit status (6 year old child, 3 year old child, rear facing/forward facing 12 month infant seats and booster seats)
- Occupied allow status (weight greater than 5th percentile female) and the air bag enabled/disabled as appropriate
- Indeterminate state.

Classification	PAD Indicator	SRS Warning Indicator
Seat unoccupied	OFF	OFF
Occupied inhibit	ON	OFF
Occupied allow	OFF	OFF
Indeterminate state	OFF	ON

The occupant classification module contains accelerometers and algorithms to compensate for the effects of longitudinal, lateral and vertical forces acting on the vehicle whilst being driven. The belt tension sensor is used to offset loads forced into the seat by 'cinched' child seats (where a child seat load on the seat is increased by a highly tensioned seat belt) and also dynamic belt loading (off-road/aggressive driving styles).

The belt minder system on vehicles with the occupant classification system uses the RCM to detect seat occupancy status based on calculations within the RCM, with the instrument cluster then determining whether a seat belt reminder should be activated based on the status of the seat belt buckle switches and the vehicle speed.

SEAT POSITION SENSOR

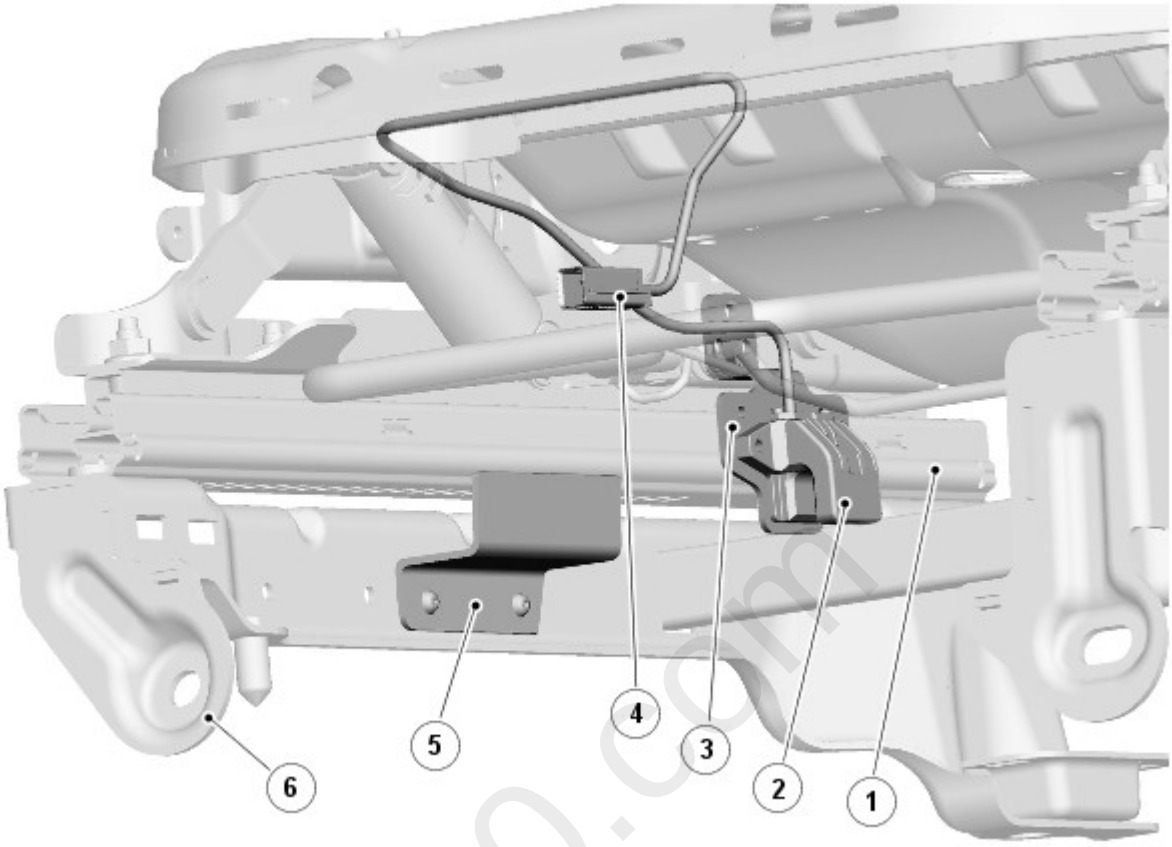

E133082

Item	Part Number	Description
1	-	Seat frame
2	-	Mounting plate
3	-	Seat position sensor
4	-	Electrical connector
5	-	Target plate
6	-	Seat base

The seat position sensor allows the RCM to detect when the driver seat is forward of a given point on the seat track. The seat position sensor consists of a Hall effect sensor attached to the driver seat frame and a target plate on the seat base. While the ignition is on, the RCM supplies the sensor with a power supply of 12 V nominal, and monitors the return voltage. When the seat frame moves forwards, the sensor moves over the target plate, which changes the reluctance of the sensor. The change of voltage is detected by the RCM and used as a switching point. The switching point is when the center of the sensor is 3 ± 4 mm from the leading edge of the target plate.

When the driver seat is forward of the switching point, the RCM increases the time delay between firing the two stages of the inflator in the driver air bag. When the driver seat is rearward of the switching point, the RCM uses the normal time delay between firing the two stages.

SRS WARNING INDICATOR

E133083

The SRS warning indicator consists of a red light emitting diode (LED) behind a SRS graphic in the speedometer of the instrument cluster.

Operation of the SRS warning indicator is controlled by a high speed CAN bus message from the RCM to the instrument cluster. The RCM illuminates the SRS warning indicator if a fault is detected, and for approximately 6 seconds during the bulb check at the beginning of each ignition cycle.

CLOCKSPRING

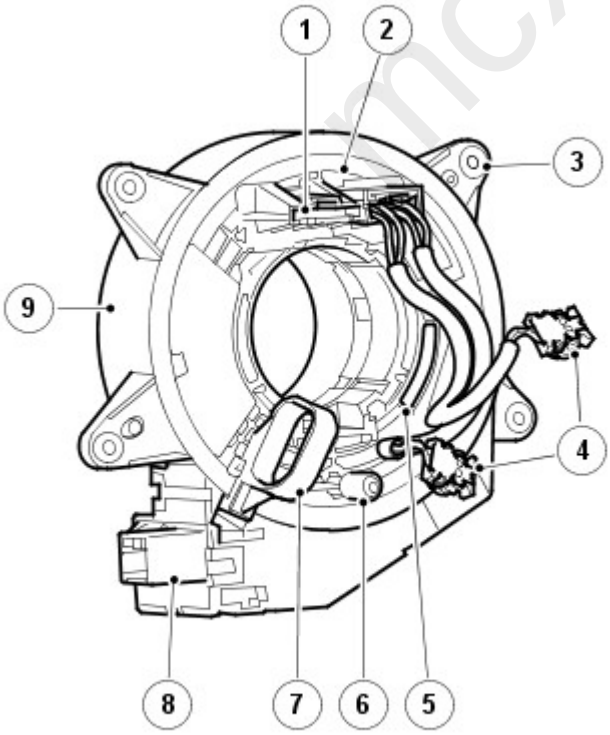

E45264

mcx30.com

Item	Part Number	Description
1	-	Electrical connector for steering wheel switch packs and horn
2	-	Inner rotor
3	-	Outer housing securing lug
4	-	Driver air bag link leads
5	-	Viewing window
6	-	Drive peg
7	-	Stopper
8	-	Electrical connector for steering column harness
9	-	Outer cover

The clockspring is installed on the steering column to provide the electrical interface between the fixed wiring harness of the steering column and the components that rotate with the steering wheel, i.e. the driver air bag, the horn and the steering wheel switch packs.

The clockspring consists of a plastic cassette which incorporates an outer cover fixed to the steering column and an inner rotor which turns with the steering wheel. Four securing lugs attach the cover to the multifunction switch on the steering column. The rotor is keyed to the steering wheel by a drive peg. A lug on the underside of the rotor operates the self-cancelling feature of the turn signal indicator switch. A ribbon lead, threaded on rollers in the rotor, links two connectors on the cover to two connectors on the rotor. Link leads for the driver air bag are installed in one of the connectors on the rotor.

To prevent damage to the ribbon lead, both the steering and the clockspring must be centralized when removing and installing the clockspring or the steering wheel. The clockspring is centralized when the drive peg is at six o'clock and 50 - 100% of a yellow wheel is visible in the viewing window.

Replacement clocksprings are fitted with a stopper, which locks the cover to the rotor, in the central position. The stopper must be broken off when the replacement clockspring is installed.

RCM

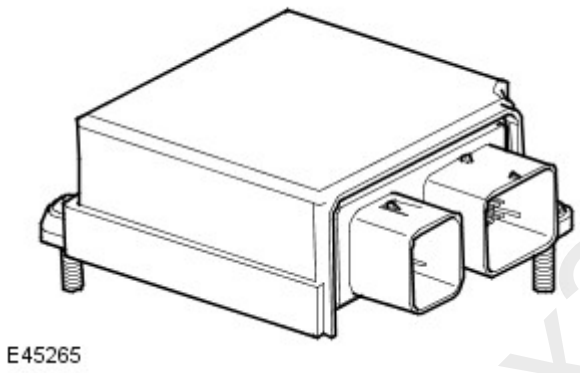

The RCM is installed on the top of the transmission tunnel, in line with the B pillars, and controls operation of the SRS (supplemental restraint system). The main functions of the RCM include:

- Crash detection and recording.
- Air bag and pretensioner firing.
- Self test and system monitoring, with status indication via the SRS warning lamp, and non volatile storage of fault information.

A safing sensor in the RCM provides confirmation of an impact to verify if air bag and pretensioner activation is necessary. A roll-over sensor monitors the lateral attitude of the vehicle. Various firing strategies are employed by the RCM to ensure that during an accident only the appropriate air bags and pretensioners are fired. The firing strategy used also depends on the inputs from the safety belt switches and the occupant monitoring system.

An energy reserve in the RCM ensures there is always a minimum of 150 milliseconds of stored energy available if the power supply is disrupted during a crash. The stored energy is sufficient to produce firing signals for the driver air bag, the passenger air bag and the safety belt pretensioners.

When the ignition is switched on the RCM performs a self test and then performs cyclical monitoring of the system. If a fault is detected the RCM stores a related fault code and illuminates the SRS warning indicator. The faults can be retrieved by Land Rover approved diagnostic equipment. If a fault that could cause a false fire signal is detected, the RCM disables the related firing circuit, and keeps it disabled during a crash event.

SRS OPERATION

General

In a collision, the sudden deceleration or acceleration is measured by the safing sensor in the RCM and by the impact sensors. The RCM evaluates the readings to determine the impact point on the vehicle and whether the deceleration/acceleration readings exceed the limits for firing any of the air bags or pretensioners. During a collision, the RCM only fires the air bags and pretensioners if the safing sensor confirms that the data from the remote sensor(s) indicates an impact limit has been exceeded. The RCM also monitors the vehicle for a roll-over accident using the internal roll-over sensor and high speed CAN (controller area network) bus messages from the anti-lock brake system (ABS) module and the steering angle sensor.

The RCM incorporates the following impact thresholds to cater for different accident scenarios:

index30.com

- Front impact, pretensioners.
- Front impact, driver and passenger air bags stage 1, belt unfastened.
- Front impact, driver and passenger air bags stage 2, belt unfastened.
- Front impact, driver and passenger air bags stage 1, belt fastened.
- Front impact, driver and passenger air bags stage 2, belt fastened.
- Rear impact.
- LH (left-hand) side impact.
- RH (right-hand) side impact.
- Roll-over.

The front impact thresholds increase in severity from pretensioners, through to driver and passenger air bag stage 2, belt fastened.

Firing Strategies

The seat belt pretensioners are fired when either the pretensioner impact limit or the roll-over limit is exceeded. The RCM only fires the pretensioners if the related safety belt is fastened. For the front passenger pretensioner to fire, the seat must also be occupied by a large person, i.e. someone over a given weight (NAS only).

The driver and passenger air bags are only fired in a frontal impact that exceeds the stage 1 threshold. Both stages of the inflator in the driver and passenger air bags are fired. At impacts between the stage 1 and 2 thresholds, the delay between the firing of the two stages varies with the severity of the impact; the more severe the impact the shorter the delay. At stage 2 impact thresholds and above, the two stages of the inflator are fired almost simultaneously. The passenger air bag is disabled unless the front passenger seat is occupied by a large person (NAS only), or the passenger air bag deactivation switch is on (all except NAS). The time delay between firing the two stages of the inflator in the driver air bag is increased if the driver seat is forward of the seat position sensor switching point.

If there is a fault with a safety belt buckle sensor, the RCM assumes the related safety belt is fastened for the pretensioner firing strategy and unfastened for the driver and passenger air bag firing strategies. If there is a fault with the occupant detection system, or if there is a fault with the passenger air bag deactivation switch, the RCM increase the time delay between firing the two stages of the inflator in the passenger air bag.

If a side impact limit is exceeded, the RCM fires the side air bag and the side air curtain(s) on that side of the vehicle. If the side impact limit on the front passenger side of the vehicle is exceeded, the RCM also evaluates the input from the occupant classification system, and fires the side air bag only if the front passenger seat is occupied by a large person (NAS only).

The side air curtain(s) on both sides of the vehicle are fired if the roll-over limit is exceeded.

If multiple impacts occur during a crash event, after responding to the primary impact the RCM will output the appropriate fire signals in response to any further impacts if unfired units are available.

Crash Signal

When the RCM outputs any of the fire signals, it also outputs a hard wired crash signal to the ECM (engine control module) and the CJB (central junction box), and changes the high speed CAN bus output message from 'no crash' to 'crash condition'.

On receipt of the crash signals:

- The engine control module (ECM) disables the fuel pump.
- Where fitted, the operation of the FFBH is disabled.
- The central junction box (CJB) enters the crash mode and:
  - Activates all of the unlock signals of the vehicle locking system, even if the vehicle is already unlocked. After 3 seconds, the CJB activates the unlock signals again.
  - Ignores all locking and superlocking inputs until the crash mode is cancelled, when it returns the locking system to normal operation.
  - Activates all of the courtesy lamps, except for the approach lamps. The activated courtesy lamps remain on until they are manually switched off at the lamp unit, or the CJB crash mode is cancelled, after which they return to normal operation.
  - Activates the hazard warning lamps. The hazard warning lamps remain on until cancelled by turning the ignition off the crash mode is cancelled.

The crash mode is cancelled by cycling the ignition.

CONTROL DIAGRAM - SHEET 1 OF 2 (ALL EXCEPT NAS)

• NOTE: A = Hardwired connections.

mex30.com

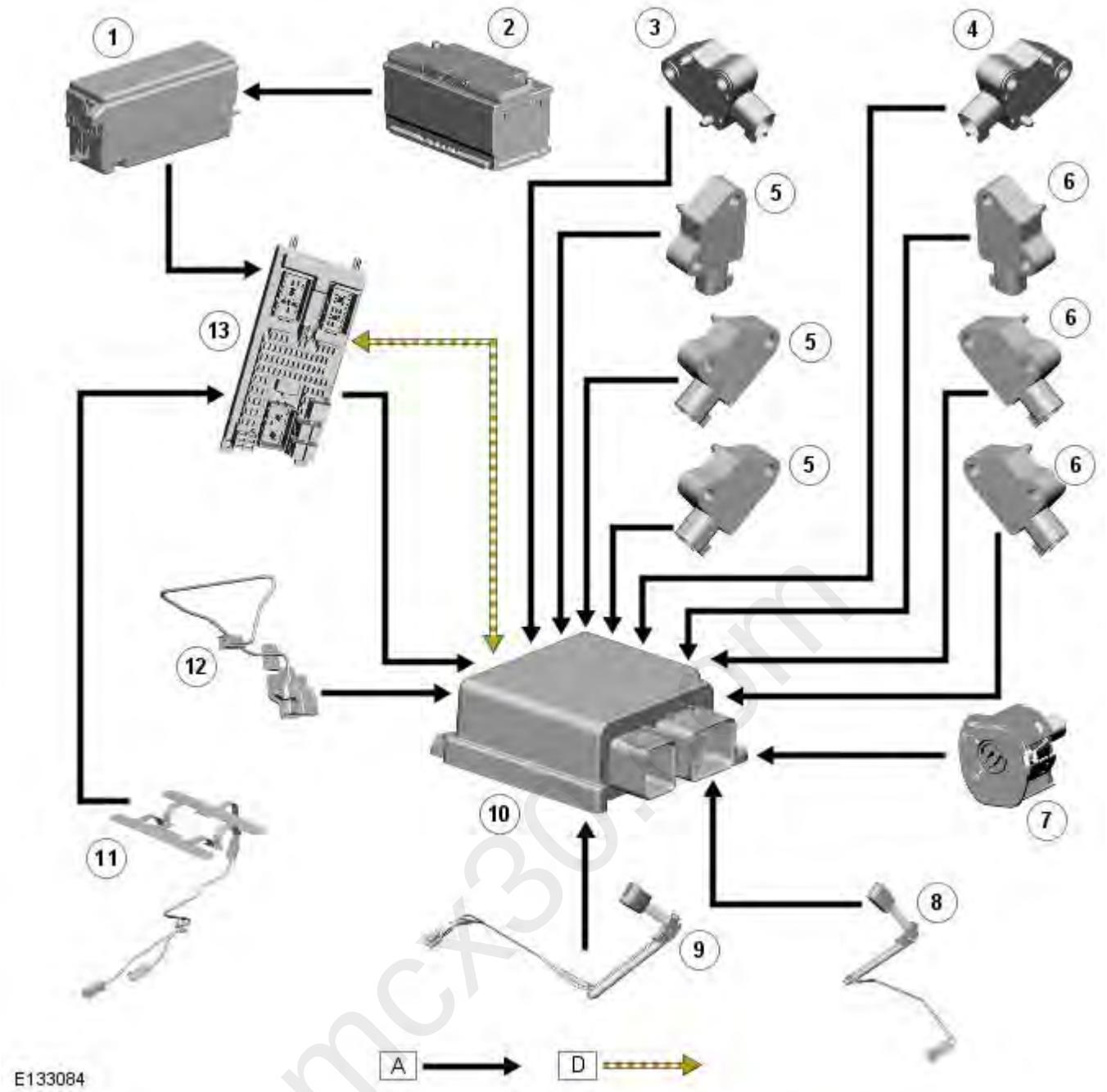

Item	Part Number	Description
1	-	Fusible link 11E, battery junction box (BJB)
2	-	Battery
3	-	Left front impact sensor
4	-	Right front impact sensor
5	-	Left side impact sensor
6	-	Right side impact sensor
7	-	Passenger air bag deactivation switch
8	-	Left safety belt buckle sensor
9	-	Instrument cluster
10	-	Right safety belt buckle sensor
11	-	Occupant detection pressure sensor
12	-	Seat position sensor
13	-	RCM
14	-	Fuse 9P, CJB
15	-	Ignition switch
16	-	Fuse 68P, CJB
17	-	Passenger air bag deactivation indicator

CONTROL DIAGRAM - SHEET 1 OF 2 (NAS)

- NOTE: A = Hardwired connections; D = High speed CAN bus.

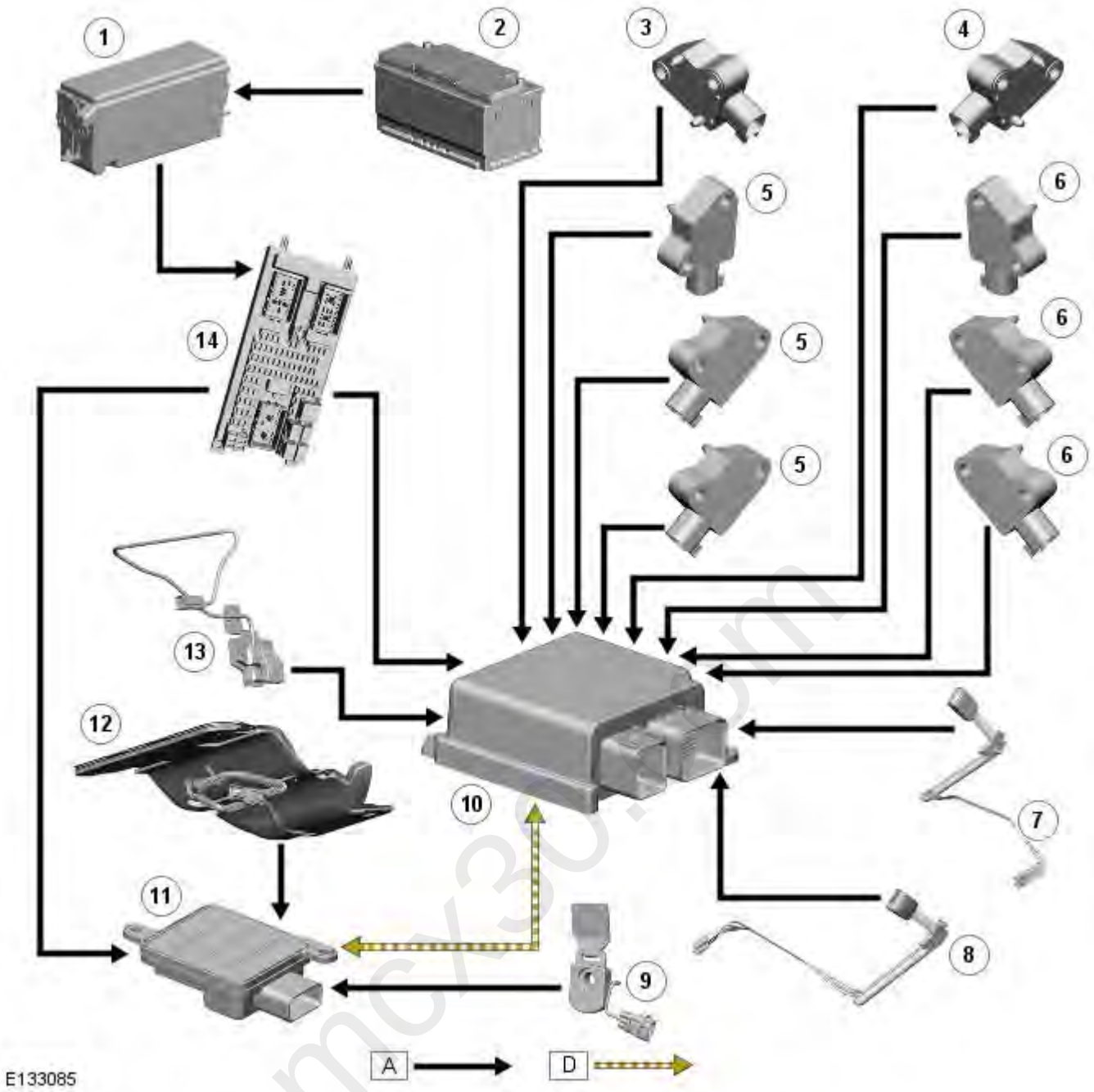

Item	Part Number	Description
1	-	Fusible link 11E, BJB
2	-	Battery
3	-	Left front impact sensor
4	-	Right front impact sensor
5	-	Left side impact sensor
6	-	Right side impact sensor
7	-	Left safety belt buckle switch
8	-	Right safety belt buckle switch
9	-	Instrument cluster
10	-	Safety belt tension sensor
11	-	Occupant classification module
12	-	Pressure pad and sensor
13	-	Seat position sensor
14	-	RCM
15	-	Fuse 9P, CJB
16	-	Ignition switch
17	-	Fuse 68P, CJB
18	-	Passenger air bag deactivation indicator

CONTROL DIAGRAM - SHEET 2 OF 2 (ALL MARKETS)

- NOTE: A = Hardwired connections; D = High speed CAN bus; N = Medium speed CAN bus.

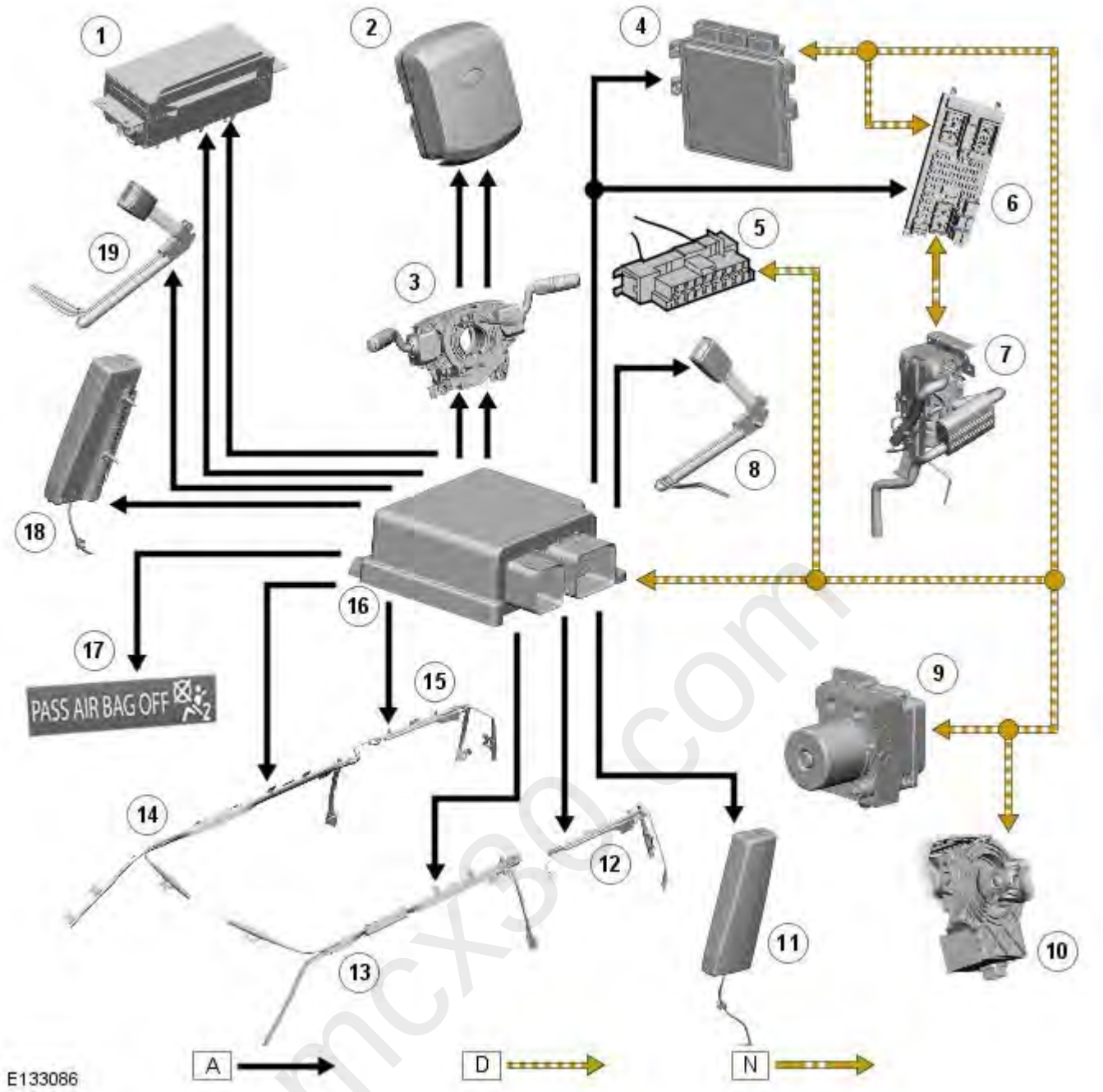

Item	Part Number	Description
1	-	Passenger air bag
2	-	Driver air bag
3	-	Clockspring
4	-	ECM
5	-	Diagnostic socket
6	-	Left pretensioner
7	-	Left side air bag
8	-	Left third row side air curtain
9	-	Left first and second row side air curtain
10	-	Right third row side air curtain
11	-	Right first and second row side air curtain
12	-	RCM
13	-	Right side air bag
14	-	Right pretensioner

Published: 11-May-2011

Supplemental Restraint System - Air Bag Supplemental Restraint System (SRS)

Diagnosis and Testing

Principle of Operation

For a detailed description of the air bag supplemental restraint system and operation, refer to the relevant Description and Operation section of the workshop manual. REFER to: Air Bag and Safety Belt Pretensioner Supplemental Restraint System (SRS) (501-20B Supplemental Restraint System, Description and Operation).

Safety Information

• WARNINGS:

To avoid accidental deployment the back-up power supply must be depleted before beginning any work on the SRS system or its components. Failure to follow this instruction may result in personal injury.

Do not use a multimeter to probe an SRS module. It is possible for the power from the meter battery to trigger the activation of the module. Failure to follow this instruction may result in personal injury.

• NOTE: It is advisable not to use a cellular phone or to have a cellular phone in close proximity when working on the SRS system or components.

• NOTE: Given the legal implications of a restraints system failure, harness repairs to Air Bag module circuits are not acceptable. Where the text refers to "REPAIR the circuit", this will normally mean the replacement of a harness.

Power supply depletion

Before beginning any work on the SRS system or related components:

1. **1.** Remove the ignition key.
2. **2.** Disconnect the battery leads, ground first.
3. **3.** Wait 2 minutes for the power circuit to discharge.

There are comprehensive instructions on the correct procedures for SRS system repairs in the workshop manual. Refer to the relevant section of the workshop manual.

Inspection and Verification

CAUTION: Diagnosis by substitution from a donor vehicle is **NOT** acceptable. Substitution of control modules does not guarantee confirmation of a fault and may also cause additional faults in the vehicle being checked and/or the donor vehicle.

• NOTE: Check and rectify basic faults before beginning diagnostic routines involving pinpoint tests.

1. **1.** Verify the customer concern.
   - Confirm the function of the warning lamp (if the warning lamp is inoperative, system faults will be signalled by an audible chime)
2. **2.** Visually inspect for obvious signs of mechanical or electrical damage.

Visual Inspection

Mechanical	Electrical
• Check for the installation of non-standard accessories which may affect or obstruct the function of the SRS system • Check the condition of trim, etc at the SRS system components • Sensor(s) • Pretensioner(s) • Air bag module(s) • Occupant detection/classification sensors • Seat position sensor	• Fuses • Wiring harness • Make sure all electrical connector(s) are engaged correctly on the air bag circuits • Make sure the Restraints Control Module (RCM) is correctly installed • Warning lamp bulb(s) • Impact sensor(s) • Buckle sensor(s) • Pretensioner(s) • Air bag module(s) • Air bag deactivation switch • Air bag deactivation warning lamp • Occupant detection/classification sensors • Seat position sensor • Clockspring

3. **3.** If an obvious cause for an observed or reported concern is found, correct the cause (if possible) before proceeding to the next step.
4. **4.** If the cause is not visually evident, check for Diagnostic Trouble Codes (DTCs) and refer to the relevant DTC Index.

mcx30.com

DTC Index

For a list of Diagnostic Trouble Codes (DTCs) that could be logged on this vehicle, please refer to Section 100-00.
REFER to: Diagnostic Trouble Code (DTC) Index - DTC: Restraints Control Module (RCM) (100-00 General Information, Description and Operation) /
Diagnostic Trouble Code (DTC) Index - DTC: Occupant Classification System (OCS) (100-00 General Information, Description and Operation).

mcx30.com

Published: 11-May-2011

Supplemental Restraint System - Driver Air Bag Module

Removal and Installation

Special Tool(s)	
	Airbag module remover 501-106

Removal

- WARNINGS:

It is imperative that before any work is undertaken on the SRS system, the appropriate information is read thoroughly.

Always disconnect both battery cables before beginning work on the SRS system. Disconnect the ground cable first. Never reverse connect the battery.

- NOTE: If the SRS component is to be replaced, the bar code of the new unit must be recorded.

1. Disconnect the battery ground cable.
   For additional information, refer to: Specifications (414-00 Battery and Charging System - General Information, Specifications).
2. Make the SRS system safe.
   For additional information, refer to: Standard Workshop Practices (100-00 General Information, Description and Operation).
3. Remove the driver air bag module.
   - Using the special tool, release the clip.
   - Repeat the above procedure for the other side.
   - Disconnect the ground cable.
   - Release the clips and disconnect the 2 electrical connectors.

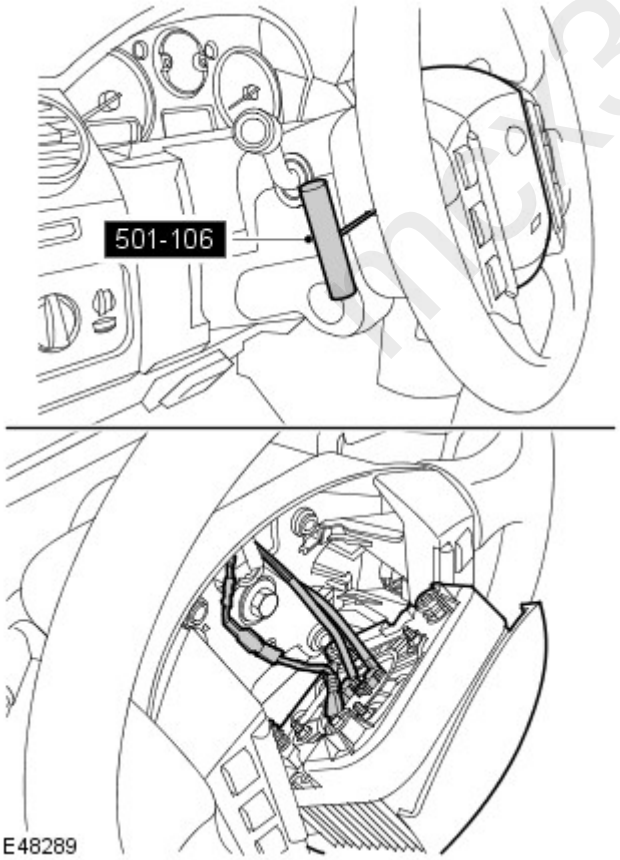

Installation

1. WARNING: The SRS electrical connectors are unique. DO NOT force, or attempt to connect electrical connectors to the wrong sockets.

CAUTION: Make sure the cables/harnesses are not twisted before connecting them to the airbag module. Once connected, do not rotate the air bag module as this will cause the wires to twist, which can lead to harness damage and SRS faults.

Attach the driver air bag module.

- Connect the ground cable.
- Connect the electrical connectors.

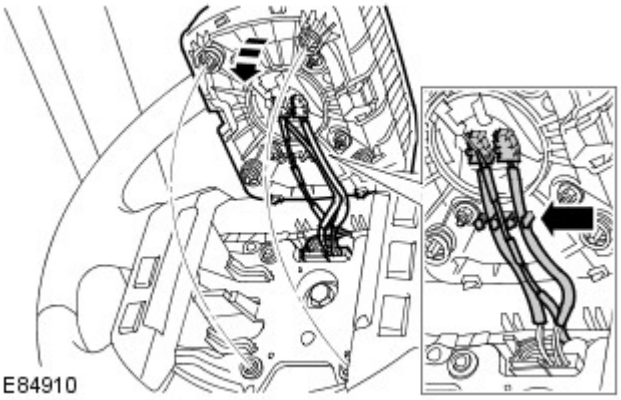

2. WARNING: Driver air bag module installation can be confirmed by hearing 2 audible clicks, 1 for each spring. The module edges should also be flush with the steering wheel.

Install the driver air bag module.

- Install top edge of module, then hinge upwards and make sure wires are connected to clips.
- Make sure the wires are not trapped behind the module.
- Hold wires in place while hinging module closed.
- Align the locating pins and springs.

mcx30.com

Published: 11-May-2011

Supplemental Restraint System - Passenger Air Bag Module

Removal and Installation

Removal

• WARNINGS:

It is imperative that before any work is undertaken on the SRS system, the appropriate information is read thoroughly.

Always disconnect both battery cables before beginning work on the SRS system. Disconnect the ground cable first. Never reverse connect the battery.

1. Disconnect the battery ground cable.
   For additional information, refer to: Specifications (414-00 Battery and Charging System - General Information, Specifications).
2. Make the SRS system safe.
   For additional information, refer to: Standard Workshop Practices (100-00 General Information, Description and Operation).
3. Remove the instrument panel upper section.
   For additional information, refer to: Instrument Panel Upper Section (501-12 Instrument Panel and Console, Removal and Installation).
4. Remove the passenger air bag module.
   - Remove the 4 nuts.

5. NOTE: Do not disassemble further if the component is removed for access only.

   Remove the passenger air bag module bracket.
   - Remove the 2 nuts.

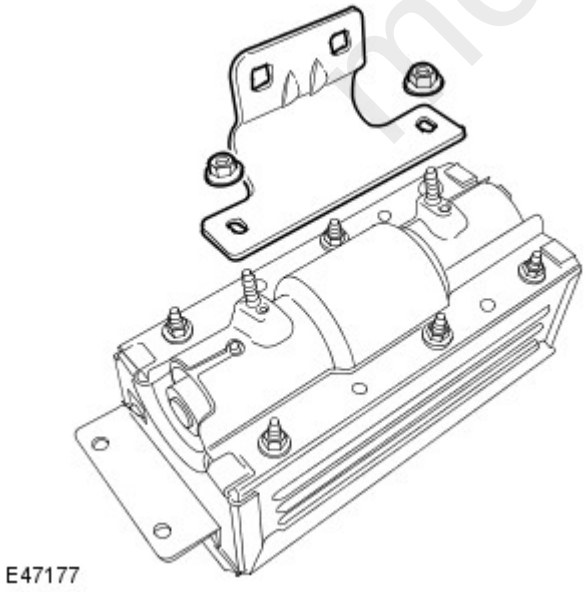

Installation

1. Install the passenger air bag module bracket.
   - Tighten the nuts to 10 Nm (7 lb.ft).

2. Install the passenger air bag module.
   - Tighten the nuts to 10 Nm (7 lb.ft).
3. Install the instrument panel upper section.
   For additional information, refer to: Instrument Panel Upper Section (501-12 Instrument Panel and Console, Removal and Installation).

mcx30.com

Published: 11-May-2011

Supplemental Restraint System - Rear Side Air Curtain Module

Removal and Installation

Removal

• WARNINGS:

It is imperative that before any work is undertaken on the SRS system, the appropriate information is read thoroughly.

Always disconnect both battery cables before beginning work on the SRS system. Disconnect the ground cable first. Never reverse connect the battery.

• NOTE: If the SRS component is to be replaced, the bar code of the new unit must be recorded.

1. Disconnect the battery ground cable.
   For additional information, refer to: Specifications (414-00 Battery and Charging System - General Information, Specifications).
2. Make the SRS system safe.
   For additional information, refer to: Standard Workshop Practices (100-00 General Information, Description and Operation).
3. Remove the headliner.
   For additional information, refer to: Headliner (501-05 Interior Trim and Ornamentation, Removal and Installation).
4. Remove the side air curtain module.
   - Disconnect the electrical connector.
   - Remove the 5 Torx screws.
   - Release the retaining strap.

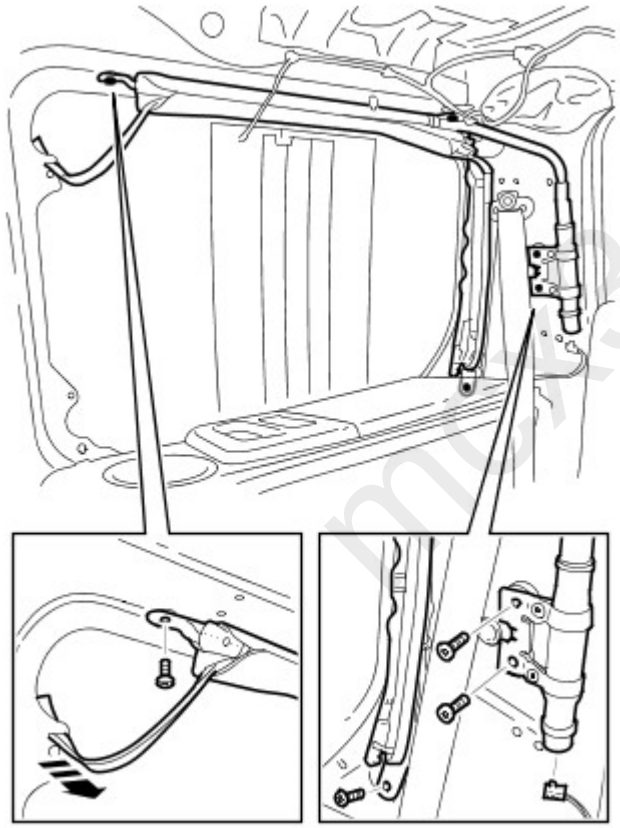

E 49973

Installation

1. Install the side air curtain module.
   - Tighten the Torx screws to 10 Nm (7 lb.ft).
   - Connect the electrical connector.
   - Secure the retaining strap.
2. Install the headliner.
   For additional information, refer to: Headliner (501-05 Interior Trim and Ornamentation, Removal and Installation).

mex30.com

3. Connect the battery ground cable.
   For additional information, refer to: Specifications (414-00 Battery and Charging System - General Information, Specifications).

mcx30.com

Published: 11-May-2011

Supplemental Restraint System - Front Impact Severity Sensor

Removal and Installation

Removal

• WARNINGS:

It is imperative that before any work is undertaken on the SRS system, the appropriate information is read thoroughly.

Always disconnect both battery cables before beginning work on the SRS system. Disconnect the ground cable first. Never reverse connect the battery.

• NOTE: If the SRS component is to be replaced, the bar code of the new unit must be recorded.

1. Make the SRS system safe.
   For additional information, refer to: Standard Workshop Practices (100-00 General Information, Description and Operation).
2. Remove the headlamp assembly.
   For additional information, refer to: Headlamp Assembly (417-01 Exterior Lighting, Removal and Installation).
3. Remove the front impact sensor.
   - Disconnect the electrical connector.
   - Remove the 2 Torx bolts.

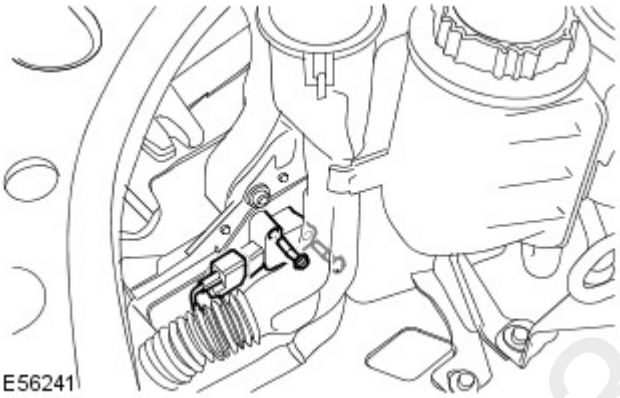

Installation

1. Install the front impact sensor.
   - Tighten the Torx bolts to 8 Nm (6 lb.ft).
   - Connect the electrical connector.
2. Install the headlamp assembly.
   For additional information, refer to: Headlamp Assembly (417-01 Exterior Lighting, Removal and Installation).

mcx30.com

Published: 11-May-2011

Supplemental Restraint System - Passenger Air Bag Deactivation (PAD) Switch

Removal and Installation

Removal

1. Make the SRS system safe.
   For additional information, refer to: Standard Workshop Practices (100-00 General Information, Description and Operation).
2. Remove the passenger side register trim panel.
   For additional information, refer to: Passenger Side Register Trim Panel (412-01 Air Distribution and Filtering, Removal and Installation).
3. Remove the PAD switch.
   - Disconnect the electrical connector.
   - Release the 2 clips.

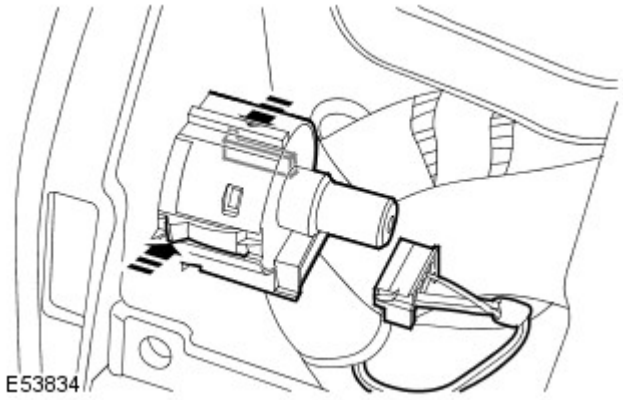

Installation

1. Install the PAD switch.
   - Connect the electrical connector.
   - Secure with the clips.
2. Install the passenger side register trim panel.
   For additional information, refer to: Passenger Side Register Trim Panel (412-01 Air Distribution and Filtering, Removal and Installation).

mcx30.com

Published: 11-May-2011

Supplemental Restraint System - Clockspring

Removal and Installation

Removal

• WARNINGS:

It is imperative that before any work is undertaken on the SRS system, the appropriate information is read thoroughly.

Always disconnect both battery cables before beginning work on the SRS system. Disconnect the ground cable first. Never reverse connect the battery.

• CAUTIONS:

Make sure the wheels are in the straight-ahead position. Failure to follow this instruction may result in damage to the components.

Correct clockspring alignment can be found by viewing a yellow marker through the window situated on the clockspring face. If the marker is not visible, carefully turn the clockspring. If the turning force increases before the marker is visible, reverse the direction to avoid component damage.

• NOTE: test piece

• NOTE: If the SRS component is to be replaced, the bar code of the new unit must be recorded.

1. Fully extend the steering column for access.

2. Make the SRS system safe.
For additional information, refer to: Standard Workshop Practices (100-00 General Information, Description and Operation).

3. Remove the steering wheel.
For additional information, refer to: Steering Wheel (211-04, Removal and Installation).

4. Remove the steering column upper shroud.

- Release the 6 clips.

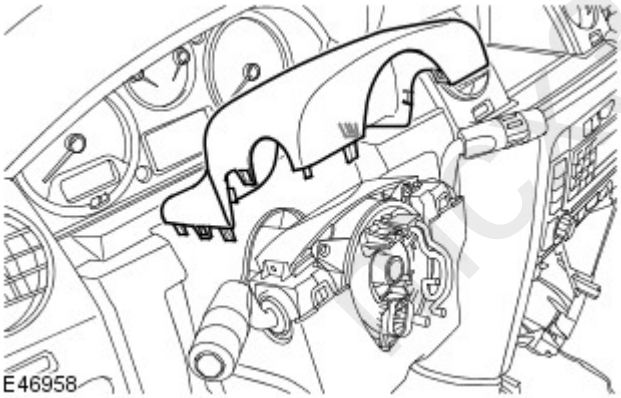

5. Remove the steering column lower shroud.

- Remove the 3 Torx screws.
- Release the steering column adjustment lever.

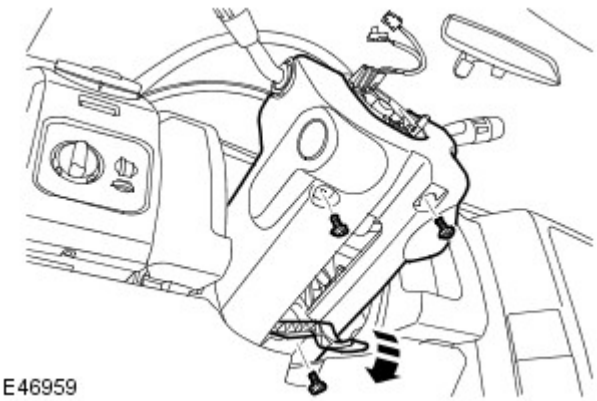

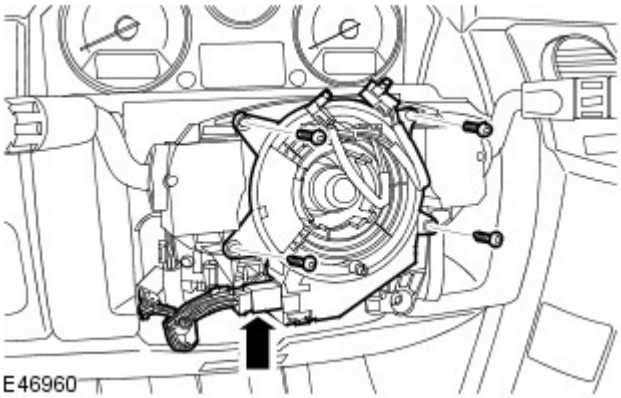

6. CAUTION: Do not dismantle the clockspring, it has no servicable parts and must be replaced as a complete assembly.

Remove the clockspring.

- Disconnect the 2 electrical connectors.
- Remove the 4 screws.

Installation

1. CAUTION: Correct clockspring alignment can be found by viewing a yellow marker through the window situated on the clockspring face. If the marker is not visible, carefully turn the clockspring. If the turning force increases before the marker is visible, reverse the direction to avoid component damage.

To install, reverse the removal procedure.

mcx30.com

Published: 11-May-2011

Supplemental Restraint System - B-Pillar Side Impact Sensor

Removal and Installation

Removal

• WARNINGS:

It is imperative that before any work is undertaken on the SRS system, the appropriate information is read thoroughly.

Always disconnect both battery cables before beginning work on the SRS system. Disconnect the ground cable first. Never reverse connect the battery.

• NOTE: If the SRS component is to be replaced, the bar code of the new unit must be recorded.

1. Make the SRS system safe.
   For additional information, refer to: Standard Workshop Practices (100-00 General Information, Description and Operation).
2. Remove the scuff plate trim panel.
   For additional information, refer to: Scuff Plate Trim Panel (501-05 Interior Trim and Ornamentation, Removal and Installation).
3. Remove the side impact sensor.
   - Remove the 2 Torx bolts.
   - Disconnect the electrical connector.

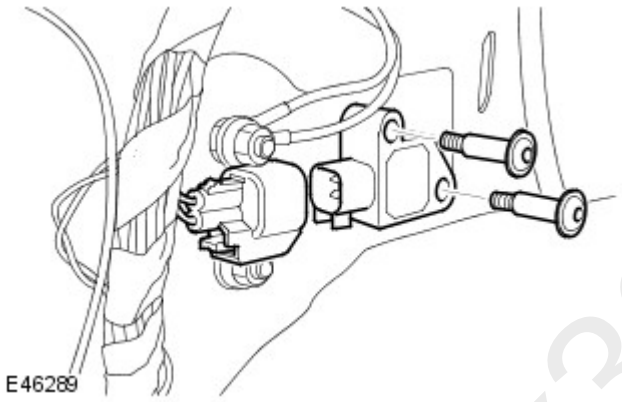

Installation

1. Install the side impact sensor.
   - Connect the electrical connector.
   - Tighten the Torx bolts to 8 Nm (6 lb.ft).
2. Install the scuff plate trim panel.
   For additional information, refer to: Scuff Plate Trim Panel (501-05 Interior Trim and Ornamentation, Removal and Installation).

mcx30.com

Published: 11-May-2011

Supplemental Restraint System - C-Pillar Side Impact Sensor

Removal and Installation

Removal

• WARNINGS:

It is imperative that before any work is undertaken on the SRS system, the appropriate information is read thoroughly.

Always disconnect both battery cables before beginning work on the SRS system. Disconnect the ground cable first. Never reverse connect the battery.

• NOTE: If the SRS component is to be replaced, the bar code of the new unit must be recorded.

1. Make the SRS system safe.
   For additional information, refer to: Standard Workshop Practices (100-00 General Information, Description and Operation).
2. Remove the C-pillar lower trim panel.
   For additional information, refer to: C-Pillar Lower Trim Panel (501-05 Interior Trim and Ornamentation, Removal and Installation).
3. Remove the side impact sensor.
   - Remove the 2 Torx bolts.
   - Disconnect the electrical connector.

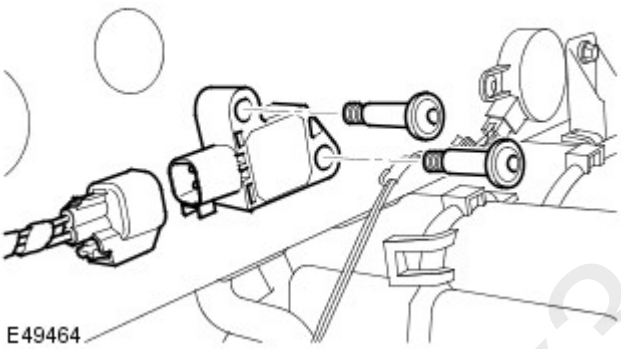

Installation

1. Install the side impact sensor.
   - Tighten the Torx bolts to 8 Nm (6 lb.ft).
   - Connect the electrical connector.
2. Install the C-pillar lower trim panel.
   For additional information, refer to: C-Pillar Lower Trim Panel (501-05 Interior Trim and Ornamentation, Removal and Installation).

mcx30.com

Published: 11-May-2011

Supplemental Restraint System - Front Door Side Impact Sensor

Removal and Installation

Removal

• WARNINGS:

It is imperative that before any work is undertaken on the SRS system, the appropriate information is read thoroughly.

Always disconnect both battery cables before beginning work on the SRS system. Disconnect the ground cable first. Never reverse connect the battery.

• NOTE: If the SRS component is to be replaced, the bar code of the new unit must be recorded.

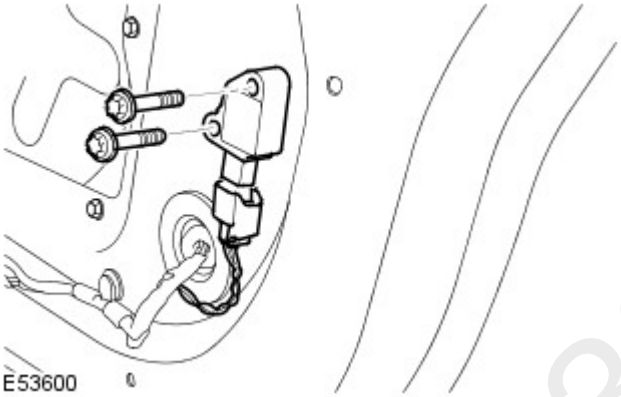

1. Make the SRS system safe.
   For additional information, refer to: Standard Workshop Practices (100-00 General Information, Description and Operation).
2. Remove the front door trim panel.
   For additional information, refer to: Front Door Trim Panel (501-05, Removal and Installation).
3. Remove the front door side impact sensor.
   - Disconnect the electrical connector.
   - Remove the 2 Torx bolts.

Installation

1. Install the front door side impact sensor.
   - Tighten the Torx bolts to 8 Nm (6 lb.ft).
   - Connect the electrical connector.
2. Install the front door trim panel.
   For additional information, refer to: Front Door Trim Panel (501-05, Removal and Installation).

mcx30.com

Published: 11-May-2011

Supplemental Restraint System - Side Air Bag Module

Removal and Installation

Removal

- WARNINGS:

It is imperative that before any work is undertaken on the SRS system, the appropriate information is read thoroughly.

Always disconnect both battery cables before beginning work on the SRS system. Disconnect the ground cable first. Never reverse connect the battery.

1. Make the SRS system safe.
   For additional information, refer to: Standard Workshop Practices (100-00 General Information, Description and Operation).
2. Remove the front seat backrest cover.
   For additional information, refer to: Front Seat Backrest Cover (501-10 Seating, Removal and Installation).
3. Remove the front seat backrest pad.
   - Remove the front seat head restraint retaining clips.

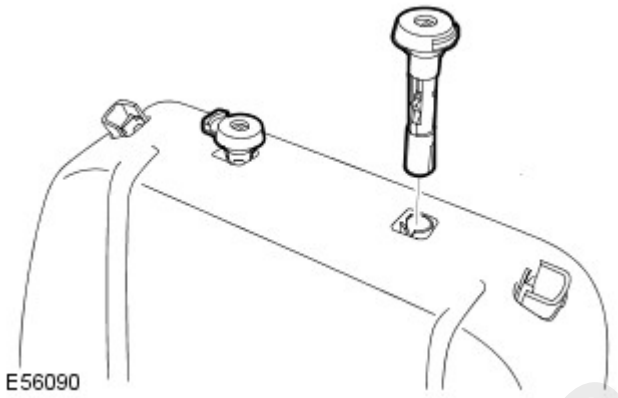

E56090

4. NOTE: If the SRS component is to be replaced, the bar code of the new unit must be recorded.

   Remove the side air bag module.
   - Release the side air bag module harness.
   - Remove the 2 nuts.

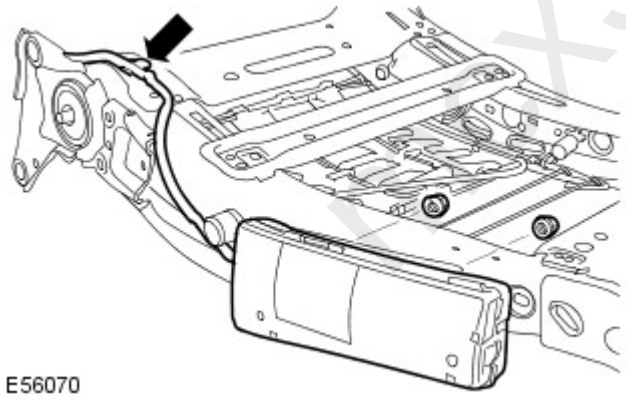

E56070

Installation

1. Install the side air bag module.
   - Tighten the nuts to 10 Nm (7 lb.ft).
   - Attach the wiring harness.
2. Install the front seat backrest pad.
   - Install the front seat head restraint retaining clips.
3. Install the front seat backrest cover.
   For additional information, refer to: Front Seat Backrest Cover (501-10 Seating, Removal and Installation).

Published: 11-May-2011

Supplemental Restraint System - Side Air Curtain Module

Removal and Installation

Removal

• WARNINGS:

It is imperative that before any work is undertaken on the SRS system, the appropriate information is read thoroughly.

Always disconnect both battery cables before beginning work on the SRS system. Disconnect the ground cable first. Never reverse connect the battery.

• NOTE: If the SRS component is to be replaced, the bar code of the new unit must be recorded.

1. Make the SRS system safe.
   For additional information, refer to: Standard Workshop Practices (100-00 General Information, Description and Operation).
2. Remove the headliner.
   For additional information, refer to: Headliner (501-05 Interior Trim and Ornamentation, Removal and Installation).
3. Release the roof opening panel drain tube from the securing clips.
4. Release the tire deflation wiring harness from securing clips.
5. Remove the side air curtain module.
   - Remove the 8 screws.
   - Remove the 5 Torx screws.
   - Disconnect the electrical connector.

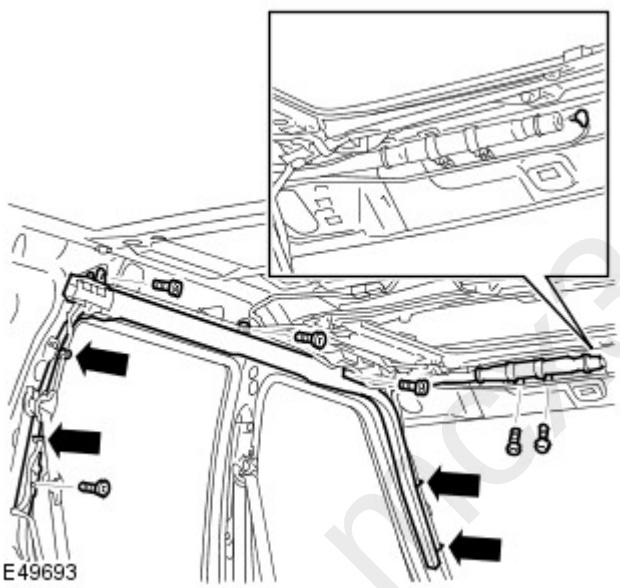

Installation

1. Install the side air curtain module.
   - Tighten the Torx screws to 10 Nm (7 lb.ft).
   - Tighten the screws.
   - Connect the electrical connector.
2. Secure the tire deflation wiring harness into the clips.
3. Secure the roof opening panel drain tube into the clips.
4. Install the headliner.
   For additional information, refer to: Headliner (501-05 Interior Trim and Ornamentation, Removal and Installation).

Published: 11-May-2011

Supplemental Restraint System - Restraints Control Module (RCM)

Removal and Installation

Removal

• WARNINGS:

It is imperative that before any work is undertaken on the SRS system, the appropriate information is read thoroughly.

Always disconnect both battery cables before beginning work on the SRS system. Disconnect the ground cable first. Never reverse connect the battery.

• NOTE: If the restraints control module (RCM) is to be replaced then T4 must be connected and the correct procedures adhered to, prior to battery disconnection.

• NOTE: If the SRS component is to be replaced, the bar code of the new unit must be recorded.

1. Disconnect the battery ground cable.
   For additional information, refer to: Specifications (414-00 Battery and Charging System - General Information, Specifications).
2. Make the SRS system safe.
   For additional information, refer to: Standard Workshop Practices (100-00 General Information, Description and Operation).
3. Remove the floor console.
   For additional information, refer to: Floor Console (501-12, Removal and Installation).
4. CAUTION: Make sure the wiring harness is protected when cutting the carpet.

   Remove the restraints control module (RCM).
   - Cut the carpet for access.
   - Disconnect the 2 electrical connectors.
   - Remove the 3 Torx screws.

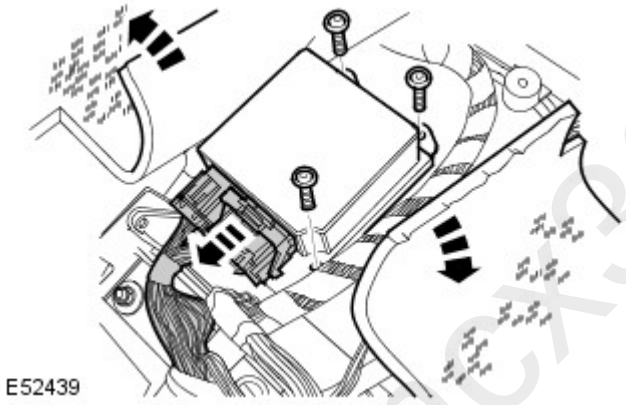

Installation

1. Install the RCM.
   - Tighten the Torx screws to 10 Nm (7 lb.ft).
   - Connect the electrical connectors.
   - Position the carpet.
2. Install the floor console.
   For additional information, refer to: Floor Console (501-12, Removal and Installation).
3. Initiate a new RCM using T4.

mcx30.com

Published: 11-May-2011

Supplemental Restraint System - Occupant Classification Sensor

Removal and Installation

Removal

- NOTE: The occupant classification sensor is part of the passenger seat cushion. The sensor is only fitted to NAS models.

1. Disconnect the battery ground cable.
   For additional information, refer to: Specifications (414-00 Battery and Charging System - General Information, Specifications).
2. Remove the front seat cushion cover.
   For additional information, refer to: Front Seat Cushion Cover (501-10 Seating, Removal and Installation).

Installation

1. Install the front seat cushion cover.
   For additional information, refer to: Front Seat Cushion Cover (501-10 Seating, Removal and Installation).
2. Connect the battery ground cable.
   For additional information, refer to: Specifications (414-00 Battery and Charging System - General Information, Specifications).
3. Using T4, configure a new occupant classification sensor.

mcx30.com